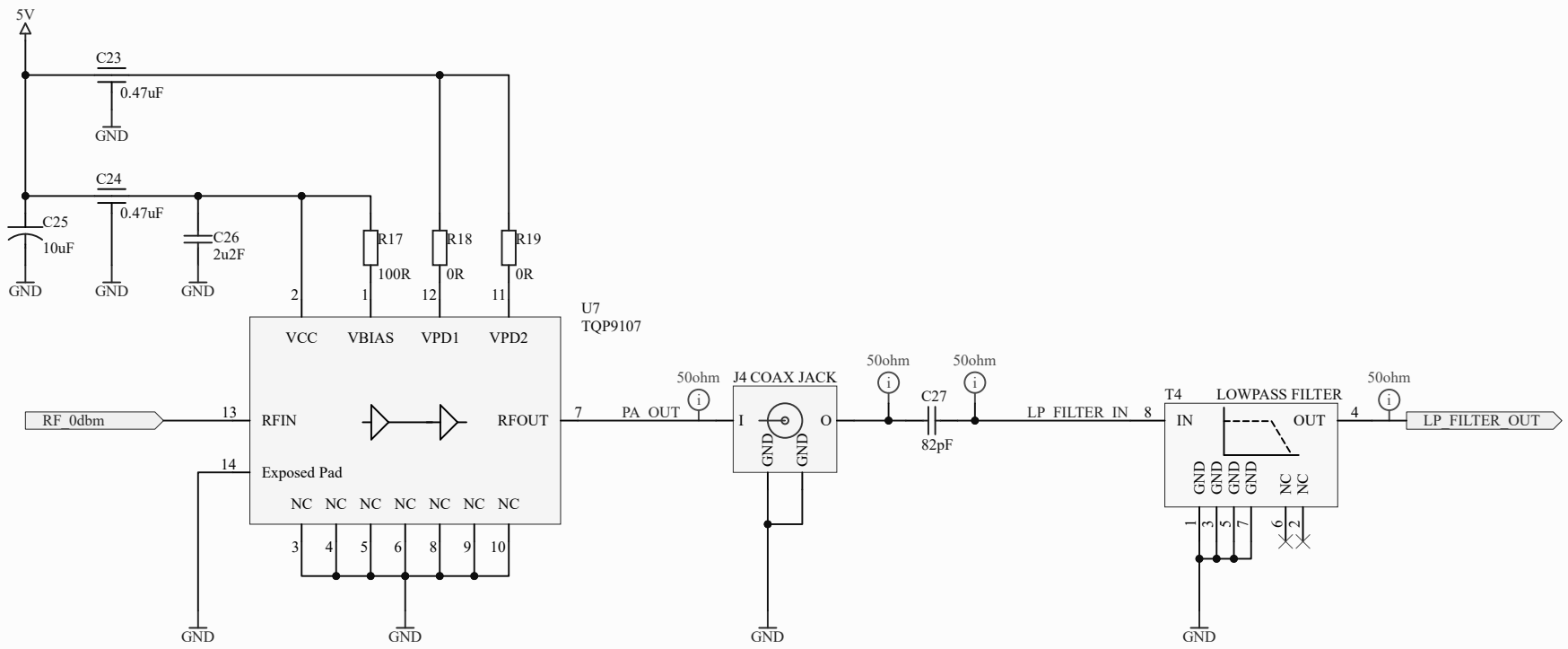

Title *RFID UHF READER*			* Hepia Gaetan Passeri TB 2020-2021 *
Size: A4	Number:*	Revision:2.0	
Date: 25.04.2022	Time: 14:30:23	Sheet 4 of 8	
File: \\hes-nas-drize.hes.adhes.hesge.ch\Home_D\diogo.borlido\Documents\Desktop\HEPIA\3eme\Industrialisation\ise_rolexboard\S			